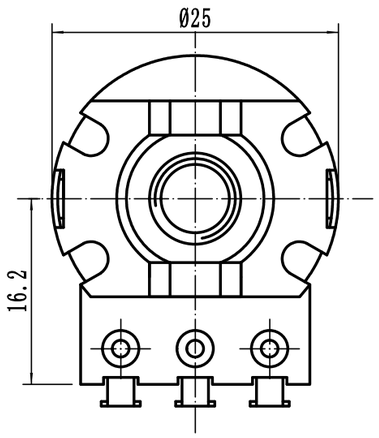

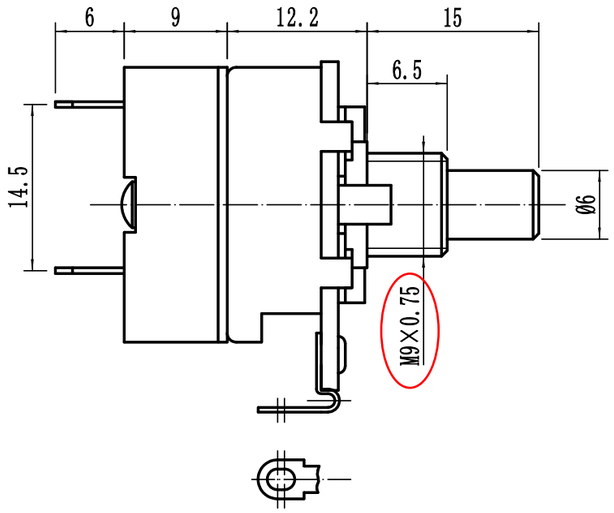

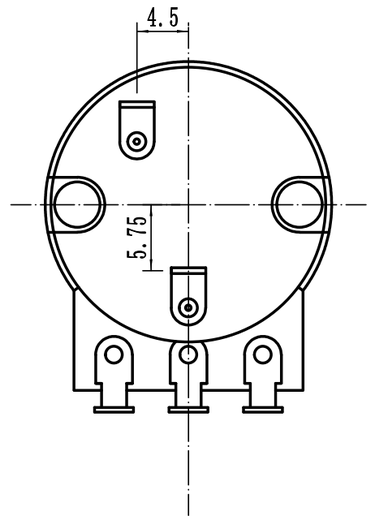

• ELECTRICAL

-Rf: 500Ω-2M

-Rf TOLERANCE: ±10%、±20%

-ELECTRICAL ANGLE: 280° ±5°

-LINE TYPE: LINEER(B) LOGARITHMIC(A)

-INDEPENDENT LINEARITY: ±5%

-CONTACT RESISTANCE VARIATION: ≤2%Rn

-TEMPERATURE COEFFICIENT: ≤±500PPM/?C

-POWER RATING: 1W(20℃)

• MECHANICAL

-ANGLE: 300° ±5°

-TORQUE SINGLE SECTION: 0.03 TO 0.375 lbf-inch

-MAXIMUM TORQUE AT END STOPS: 4.5 lbf-inch

-SUBSTRATE MATERIAL: PHENOL RESION LAMINATE

-RESISTANCE ELEMENT: CERMET

-ROTATIONAL LIFE: >50,000 CYCLES

• ENVIRONMATAL

-STORAGE TEMPERATURE -40℃ TO +85℃

-OPERATING TEMPERATURE -25℃ TO +70℃

• Switch Specifiations

-Noninal current 1A, 50VAC

-Contact Resistance 10mΩ

-Operating torque 3N•cm

-Operating angle 10°

-Test Voltage 500V

● SHAFT STYLE "R"

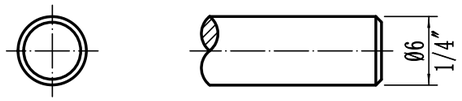

● SHAFT STYLE "S"

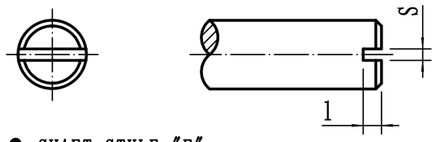

● SHAFT STYLE "F"

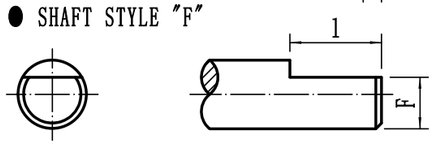

● SHAFT STYLE "ST"

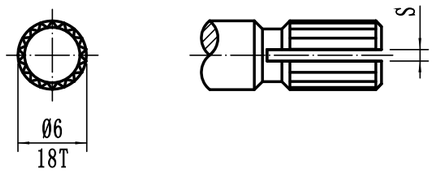

公差等级	基本线性尺寸分段					基本角度尺寸分段			
(GB/T1804)	0~3	>3~6	>6~30	>30~120	>120~400	~10°	>10°~50°	>50°~120°	>120°~360°
中等(m)	±0.1	±0.1	±0.2	±0.3	±0.6	±1°	±1° 15'	±1° 30'	±2°

					PT25 WITH SWICH single pole single throw	PT25-SPST M9x0.75x6.5-Ø6-L15R			
标记	处数	更改文件号	签名	年 月 日		等级标记		重 量	比 例
设 计		金国华							2:1
审 核						第 页		共 页	
工 艺									
标准化					涂镀	东台市亨利通电子元器件有限公司			
批 准									